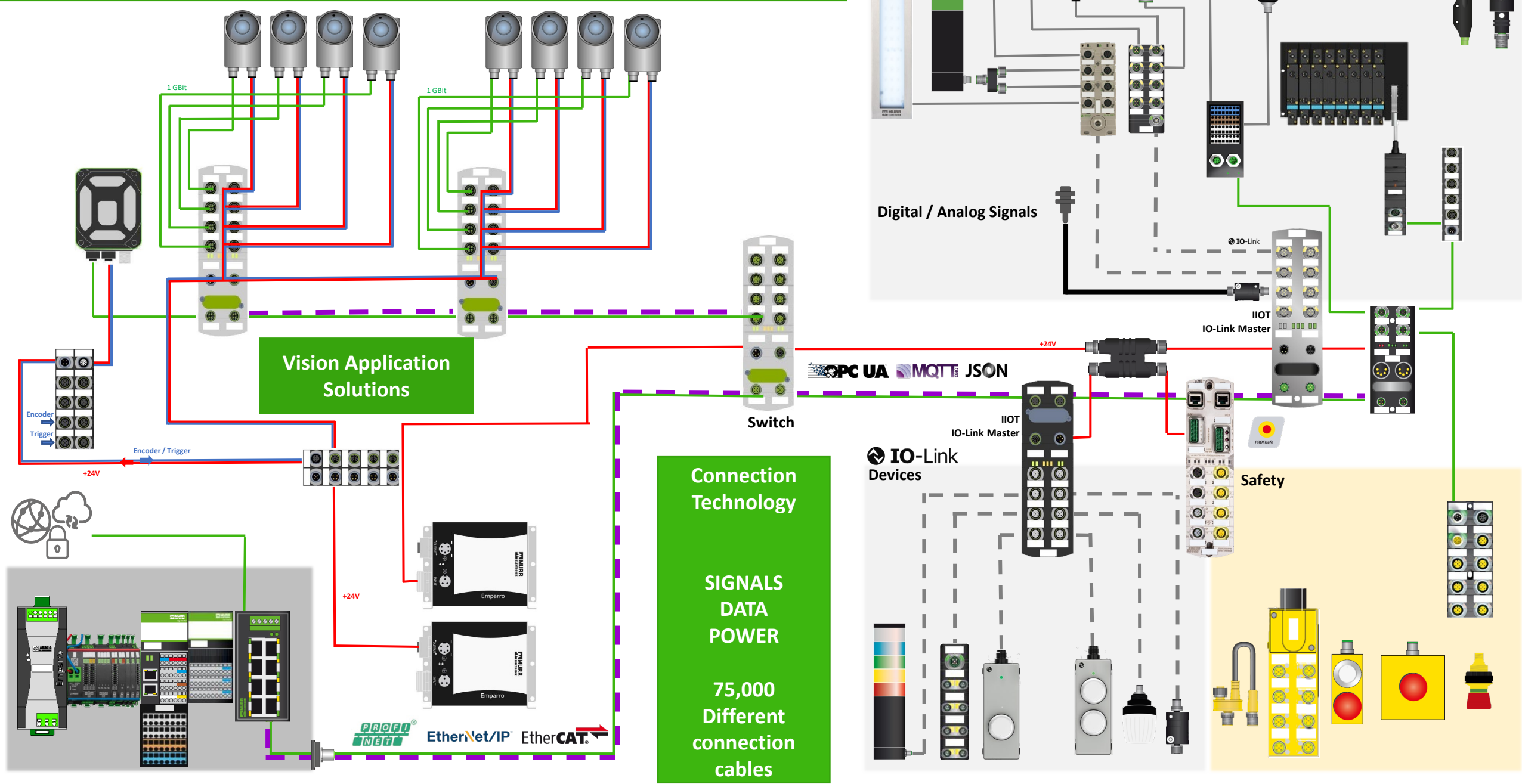MURRELEKTRONIK'S LOGISTICS PRODUCTS IN ONE SYSTEM